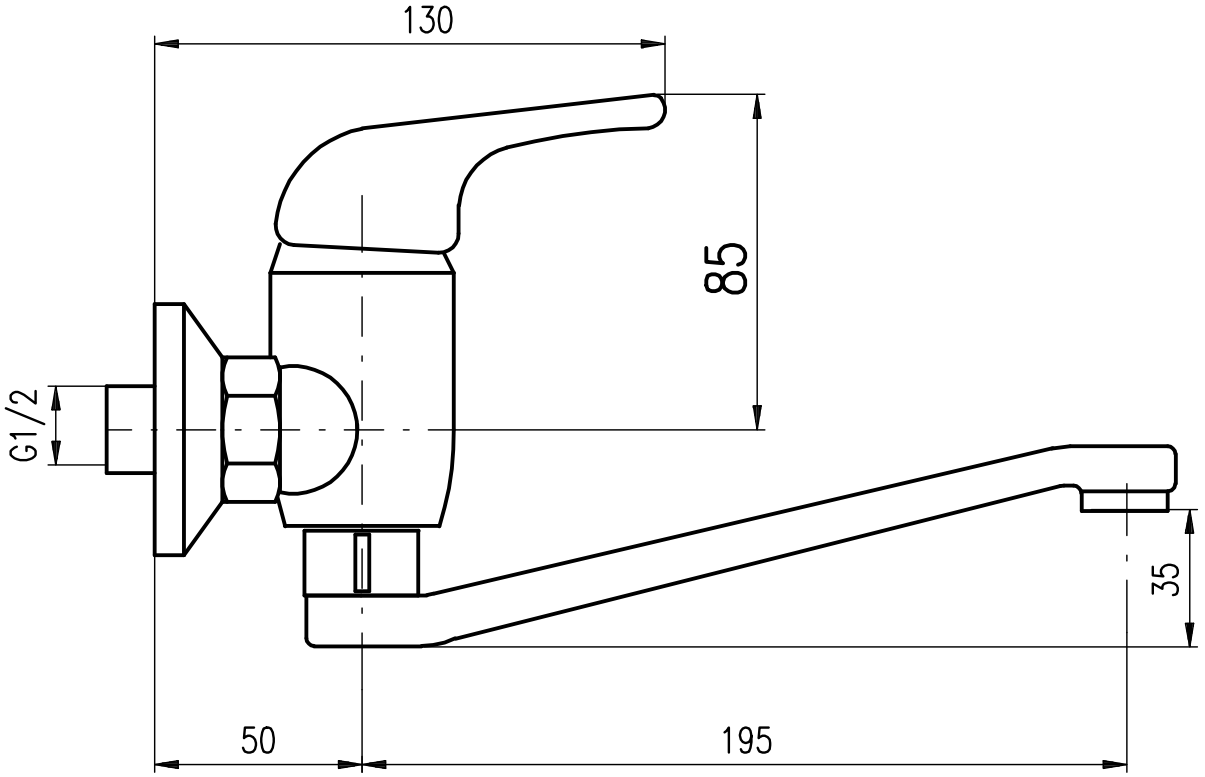
130
85
G1/2
35
50
195